D4-XE

DMX512

4 Channel Constant Voltage DMX512 & RDM Decoder

- Comply with the DMX512 standard protocols.
- Digital numeric display, set DMX decode start address by buttons.
- RDM function can realize intercommunication between DMX master and decoder. For example, DMX decoder address can be set by DMX master console.
- 1/2/4 DMX channel output selectable.
- 16bit (65536 levels) /8bit (256 levels) grey level selectable.
- PWM frequency 250/500/1000/2000/4000/8000/16000Hz selectable.
- Logarithmic or linear dimming curve selectable.
- Stand-alone RGB/RGBW mode and 4 channel dimmer mode selectable, which be controlled by buttons with built-in programs, instead of DMX signal.
- Green terminal, XLR5 and RJ45 port DMX signal input.
- Over-heat / Short circuit protection, recover automatically.

FC CE RoHS emc RED

Technical Parameters

Input and Output	
Input voltage	12-48VDC
Input current	32.5A
Output voltage	4 x (12-48)VDC
Output current	4x8A@12/24V, 4x6A@36/48V
Output power	384W@12V, 768W@24V, 864W@36V, 1152W@48V
Output type	Constant voltage

Safety and EMC	
EMC standard(EMC)	ETSI EN 301 489-1 V2.2.3 ETSI EN 301 489-17 V3.2.4
Safety standard	EN 61348-1:2015+A1:2021 EN 61348-2-13:2014+A1:2017
Radio Equipment(RED)	ETSI EN 300 328 V2.2.2
Certification	CE, EMC, RED
Warranty	5 years

Environment	
Operation temperature	Ta: -30°C ~ +55°C
Case temperature (Max.)	Tc: +85°C
IP rating	IP20
Package	
Size	L175x W80 x H45mm
Gross weight	0.395kg

Mechanical Structures and Installations

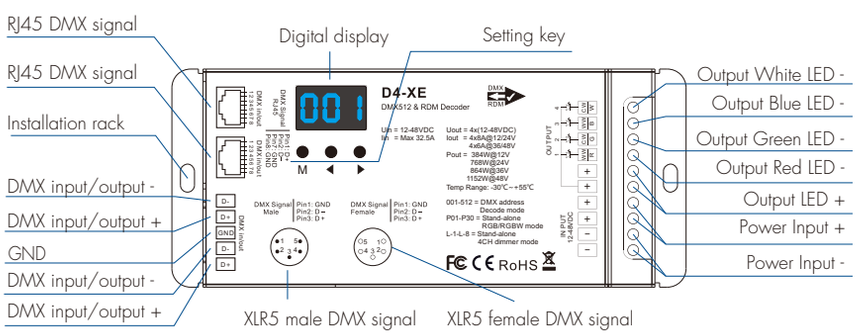

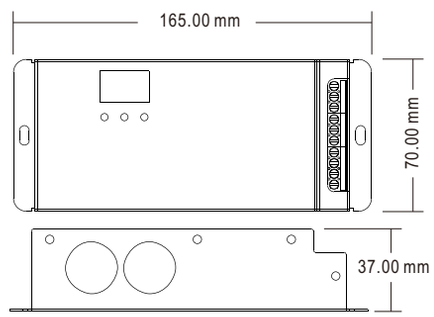

Wiring Diagram

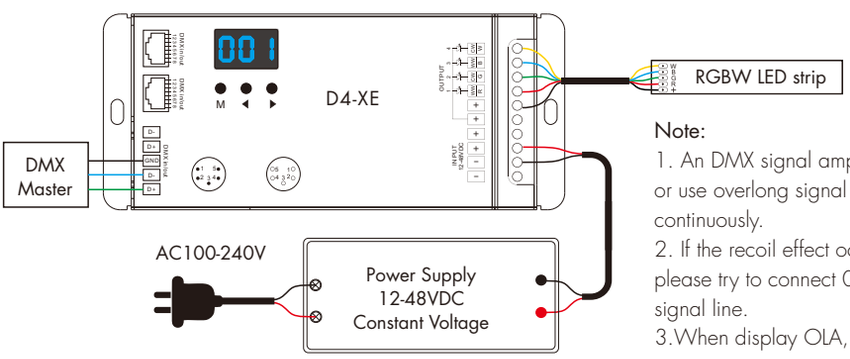

Note:

1. An DMX signal amplifier is needed if more than 32 decoders are connected, or use overlong signal line, signal amplification should not be more than 5 times continuously.
2. If the recoil effect occurs because of longer signal line or bad line quality, please try to connect 0.25W 90-120Ω terminal resistor at the end of each DMX signal line.
3. When display OLA, overload alarm. When display OHA, overheat alarm.

Operation

System parameter setting

- Long press M and ◀ key in the same time for 2s, prepare for setup system parameter: decode mode, grey level, output PWM frequence, output brightness curve, default output level, automatic blank screen. short press M key to switch six item.
- Decode mode: short press ◀ or ▶ key to switch 1/2/4 channel decode mode("d-1","d-2" or "d-4"). When set as 1 channel decode, the decoder occupy only 1 DMX address, and four channel output the same brightness of this DMX address.
- Grey level: short press ◀ or ▶ key to switch 8bit("b08") or 16 bit("b16"). choose 16 bit if the DMX master support 16 bit.
- Output PWM frequency: short press ◀ or ▶ key to switch 250Hz("F02"), 500Hz("F05"), 1000Hz("F10"), 2000Hz("F20"), 4000Hz("F40"), 8000Hz("F80") or 16000Hz("F16").
  Higher PWM frequency, will cause lower output current, higher power noise, but more suitable for camera(No flickers for video).

- Output brightness curve: short press ◀ or ▶ key to switch linear curve("C-L") or logarithmic curve("C-E").
- Default output level: press ◀ or ▶ key to change default 0-100% level ("d00" to "dFF") when no DMX input signal.
- Automatic blank screen: short press ◀ or ▶ key to switch enable ("bon") or disable("boF") automatic blank screen.
- Long press M key for 2s or timeout 10s, quit system parameter setting.

DMX mode

- Short press M key, when display 001~512, enter DMX mode.
- Press ◀ or ▶ key to change DMX decode start address(001~512), long press for fast adjustment.
- If there is a DMX signal input, will enter DMX mode automatically.
- DMX Dimming: Each D4-XE DMX decoder occupy 4 DMX address when connecting the DMX console. For example, the defaulted start address is 1, their corresponding relationship in the form:

DMX mode
(001~512)

DMX Console	DMX Decoder Output
CH1 0-255	CH1 PWM 0-100% (LED R)
CH2 0-255	CH2 PWM 0-100% (LED G)
CH3 0-255	CH3 PWM 0-100% (LED B)

Stand-alone RGB/RGBW mode

- Enter stand-alone RGB/RGBW mode only when DMX signal is disconnected or lost.
- Short press M key, when display P01~P30, enter stand-alone RGB/RGBW mode.
- Pres ◀ or ▶ key to change dynamic mode number(P01~P30).
- Each mode can adjust speed and brightness.
  Long press M key for 2s, prepare for setup mode speed, brightness, W channel brightness.
  Short press M key to switch three item.
  Press ◀ or ▶ key to setup value of each item.
  Mode speed: 1-10 level speed(S-1, S-9, S-F).
  Mode brightness: 1-10 level brightness(b-1, b-9, b-F).
  W channel brightness: 0-255 level brightness(400-4FF).
  Long press M key for 2s, or timeout 10s, quit setting.

Stand-alone RGB/ RGBW mode
(P01~P30)

Speed
(8 level)

Brightness
(10 level,100%)

Stand-alone dimmer mode

- Enter stand-alone dimmer mode only when DMX signal is disconnected or lost.
- Short press M key, when display L-1~L-8, enter stand-alone dimmer mode.
- Press ◀ or ▶ key to change dimmer mode number(L-1~L-8).
- Each dimmer mode can adjust each channel brightness independently.
  Long press M key for 2s, prepare for setup four channel brightness.
  Short press M key to switch four channel(100~1FF, 200~2FF, 300~3FF, 400~4FF).
  Press ◀ or ▶ key to setup brightness value of each channel.
  Long press M key for 2s, or timeout 10s, quit setting.

Stand-alone dimmer mode
(L-1~L-8)

Restore factory default parameter

- Long press ◀ and ▶ key for 2s, restore factory default parameter, display"RES".
- Factory default parameter: DMX decode mode, DMX decode start address is 1, four channel decode, 8 bit grey level, 2000Hz PWM frequence output, logarithmic brightness curve, output 100% level when no DMX input, RGB mode number is 1, dimmer mode number is 1, disable automatic blank screen.

RGB change mode list

No.	Name	No.	Name	No.	Name
P01	Static red	P11	Green strobe	P21	Red yellow smooth
P02	Static green	P12	Blue strobe	P22	Green cyan smooth
P03	Static blue	P13	White strobe	P23	Blue purple smooth
P04	Static yellow	P14	RGB strobe	P24	Blue white smooth
P05	Static cyan	P15	7 color strobe	P25	RGB+W smooth
P06	Static purple	P16	Red fade in and out	P26	RGBW smooth
P07	Static white	P17	Green fade in and out	P27	RGBY smooth
P08	RGB jump	P18	Blue fade in and out	P28	Yellow cyan purple smooth
P09	7 color jump	P19	White fade in and out	P29	RGB smooth
P10	Red strobe	P20	RGBW fade in and out	P30	6 color smooth

Dimming curve setting

Linear dimming curve

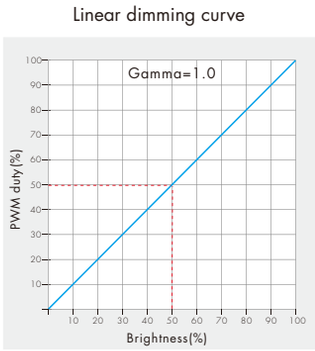

Logarithmic dimming curve

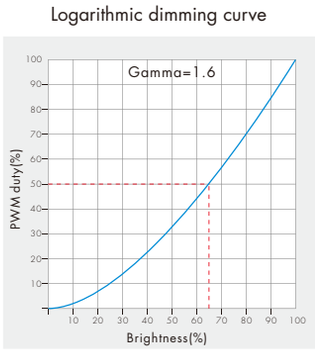

Malfunctions analysis & troubleshooting

Malfunctions	Causes	Troubleshooting
No light	1. No power. 2. Wrong connection or insecure.	1. Check the power. 2. Check the connection.
Wrong color	1. Wrong connection of R/G/B/W wires. 2. DMX decode address error.	1. Reconnect R/G/B/W wires. 2. Set corrrect decode address.
Uneven intensity between front and rear,with voltage drop	1. Output cable is too long. 2. Wire diameter is too small. 3. Overload beyond power supply capability. 4. Overload beyond controller capability.	1. Reduce cable or loop supply. 2. Change wider wire. 3. Replace higher power supply. 4. Add power repeater.